CORE VALUES | QUALITY PRODUCTS | SUPERIOR SERVICE

CORE® LIFTING PRODUCTS

SWAGE SOCKETS & BUTTONS

Crosby®

MUNCY™ MACHINE

CoreLifting.com

Crosby®

GUNNEBO® Industries

PRODUCT CATALOG

with application & warning information

Imperial

Crosby®

S-501

- Forged from special bar quality carbon steel, suitable for cold forming.
- Swage socket terminations have an efficiency rating of 100% based on the catalog strength of wire rope.
- Hardness controlled by spheroidize annealing.
- Stamp for identification after swaging without concern for fractures (as per directions in Wire Rope End Terminations User's Manual).
- Swage sockets incorporate a reduced machined area of the shank which is equivalent to the proper 'after swage' dimension. Before swaging, this provides for an obvious visual difference in the shank diameter. After swaging, a uniform shank diameter is created allowing for a QUIC-CHECK® and permanent visual inspection opportunity.
- S-501 Swage Sockets are recommended for use with 6 x 19 or 6 x 37, IPS or XIP (EIP), XXIP (EEIP), RRL, FC or IWRC wire rope.
- In accordance with ASME B30.9, all slings terminated with swage sockets shall be proof loaded.*

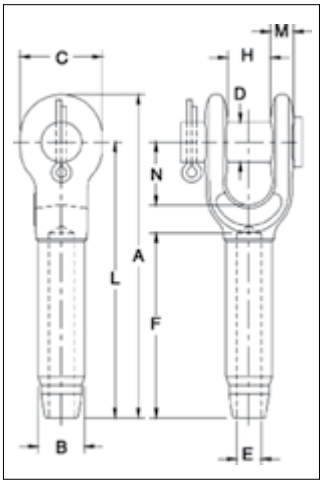

QUIC-CHECK®

S-501 Open Swage Sockets

S-501 and S-501B Open Socket Specifications																		Swager / Die Stock No.			
		Rope Size				Before Swage Dimensions (in)										Tol. +/-			Standard		
S-501 Stock No.	S-501B Stock No. †	(in)	(mm)	Wt. Each (lb)	Ultimate Load** (t)	A	B	C	D	E	F	H	L	M	N	H	Max. After Swage Dim. (in)	Die Description	500 1000 1500 Ton 5 x 7	Replace-ment Round Pin Kit Stock No.	Replace-ment Bolt/Nut/cot-ter Kit Stock No.
1039021	1054001	1/4	6	.52	5.4	4.78	.50	1.38	.69	.27	2.19	.69	4.00	.38	1.47	.06	.46	1/4 Socket	1192845	1083124	1092209
1039049	1054010	5/16	8	1.12	11.8	6.3	.78	1.62	.81	.34	3.25	.80	5.34	.48	1.67	.06	.71	5/16-3/8 Socket	1192863	1083142	1092227
1039067	1054029	3/8	9-10	1.30	13.6	6.3	.78	1.62	.81	.41	3.25	.80	5.34	.48	1.67	.06	.71	5/16-3/8 Socket	1192863	1083142	1092227
1039085	1054038	7/16	11-12	2.08	18.1	7.82	1.01	2.00	1.00	.49	4.31	1.00	6.69	.56	1.96	.06	.91	7/16-1/2 Socket	1192881	1083160	1092245
1039101	1054047	1/2	13	2.08	21.3	7.82	1.01	2.00	1.00	.55	4.31	1.00	6.69	.56	1.96	.06	.91	7/16-1/2 Socket	1192881	1083160	1092245
1039129	1054056	9/16	14	4.67	31.8	9.54	1.27	2.38	1.19	.61	5.38	1.25	8.13	.68	2.21	.06	1.16	9/16-5/8 Socket	1192907	1083188	1092272
1039147	1054065	5/8	16	4.51	34.9	9.54	1.27	2.38	1.19	.68	5.38	1.25	8.13	.68	2.21	.06	1.16	9/16-5/8 Socket	1192907	1083188	1092272
1039165	1054074	3/4	18-20	7.97	43.5	11.61	1.56	2.75	1.38	.80	6.44	1.50	10.00	.80	2.69	.06	1.42	3/4 Socket	1192925	1083204	1092290
1039183	1054083	7/8	22	11.52	51.5	13.37	1.72	3.13	1.63	.94	7.50	1.75	11.63	.94	3.20	.07	1.55	7/8 Socket	1192943	1083222	1092316
1039209	1054092	1	24-26	17.80	71.4	15.47	2.00	3.69	1.81	1.07	8.63	2.00	13.38	1.07	3.68	.08	1.80	1 Socket	1192961	1083240	1092334
1039227	1054104	1-1/8	28	25.25	83.3	17.35	2.25	4.12	2.25	1.19	9.63	2.25	15.00	1.19	4.18	.10	2.05	1-1/8 Socket	1192989	1083268	1092361
1039245	1054113	1-1/4	32	35.56	109	19.2	2.53	4.59	2.50	1.34	10.69	2.50	16.50	1.27	4.68	.10	2.30	1-1/4 Socket	1193005	1083286	2038985
1039263	1054122	1-3/8	34-36	43.75	136	21.1	2.81	5.25	2.50	1.46	11.88	2.41	18.13	1.46	5.25	.10	2.56	1-3/8 Socket	1193023	1083286	2038986
1039281	1054131	1-1/2	38-40	58.50	181	23.17	3.08	5.50	2.75	1.59	12.81	3.00	19.75	1.70	5.70	.10	2.81	1-1/2 Socket	1193041	1083302	1092414
1039307	1054140	1-3/4	44	88.75	228	26.7	3.40	6.25	3.50	1.87	15.06	3.50	23.00	2.11	6.67	.10	3.06	1-3/4 Socket	1193069	1085541	1092441
1042767	1054159	2	48-52	146.2	272	31.15	3.94	7.80	3.75	2.12	17.06	4.00	26.75	1.81	8.19	.10	3.56	2 Socket	1193087	1089985	1092450

S-501 and S-501B Open Socket Specifications				Swager / Die Stock No.				
		Rope Size			Standard		Side Load	
S-501 Stock No.	S-501B Stock No. †	(in)	(mm)	Die Description	500 Ton 1000 Ton 1500 Ton 5 x 7	1500 Ton 3000 Ton 6 x 12	1500 Ton 6 x 12	3000 Ton 6 x 12
1039281	1054131	1-1/2	38-40	1-1/2 Socket	1193041	1191267	1195355	1195192
1039307	1054140	1-3/4	44	1-3/4 Socket	1193069	1191276	1195367	1195209
1042767	1054159	2	48-52	2 Socket	1193087	1191294	1195379	1195218

*Maximum Proof Load shall not exceed 50% of XXIP rope catalog breaking strength.** The Ultimate Loads of 3/4" through 1 1/4" sizes have been increased to meet the requirements for 8 strand 2160 Grade pendants.**† Assembly with bolt, nut and cotter pin. Note: Fittings designed only to be used on exact sizes listed.**
NOTE: Before using any Crosby fitting with any other type lay, construction or grade of wire rope, it is recommended that the termination be destructive tested and documented to prove the adequacy of the assembly to be manufactured.

© 2025 Kito Crosby. All Rights Reserved.

S-502

- Forged from special bar quality carbon steel, suitable for cold forming.
- Swage socket terminations have an efficiency rating of 100% based on the catalog strength of wire rope.
- Hardness controlled by spheroidize annealing.
- Stamp for identification after swaging without concern for fractures (as per directions in Wire Rope End Terminations User's Manual).
- Swage sockets incorporate a reduced machined area of the shank which is equivalent to the proper 'after swage' dimension. Before swaging, this provides for an obvious visual difference in the shank diameter. After swaging, a uniform shank diameter is created allowing for a QUIC-CHECK® and permanent visual inspection opportunity.
- S-502 Swage Sockets are recommended for use with 6 x 19 or 6 x 37, IPS or XIP (EIP), XXIP (EEIP), RRL, FC or IWRC wire rope.
- In accordance with ASME B30.9, all slings terminated with swage sockets shall be proof loaded.*

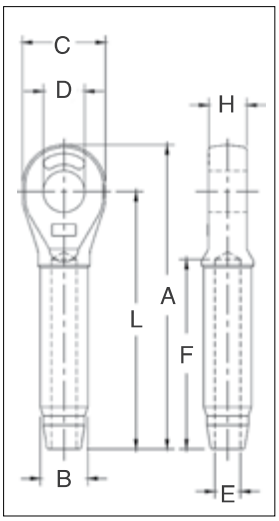

QUIC-CHECK®

7

S-502 Closed Swage Sockets

S-502 Closed Socket Specifications														Swager / Die Data				
	Rope Size				Before Swage Dimensions (in)										Stock No.		Side Load	
S-502 Stock No.	(in)	(mm)	Wt. Each (lb)	Ultimate Load** (t)	A	B	C	D	E	F	H	L	Max. After Swage Dim. (in)	Die Description	500 1000 1500 Ton 5 x 7	1500 3000 Ton 6 x 12	1500 Ton 6 x 12	3000 Ton 6 x 12
1039325	1/4	6	.33	5.4	4.28	.51	1.38	.76	.27	2.19	.50	3.50	.46	1/4 Socket	1192845	-	-	-
1039343	5/16	8	.75	11.8	5.42	.78	1.62	.88	.34	3.25	.68	4.50	.71	5/16-3/8 Socket	1192863	-	-	-
1039361	3/8	9-10	.72	13.6	5.42	.78	1.62	.88	.41	3.25	.68	4.50	.71	5/16-3/8 Socket	1192863	-	-	-
1039389	7/16	11-12	1.42	18.1	6.88	1.01	2.00	1.07	.49	4.31	.87	5.75	.91	7/16-1/2 Socket	1192881	-	-	-
1039405	1/2	13	1.42	21.3	6.88	1.01	2.00	1.07	.55	4.31	.87	5.75	.91	7/16-1/2 Socket	1192881	-	-	-
1039423	9/16	14	2.92	31.8	8.59	1.27	2.38	1.28	.61	5.38	1.14	7.25	1.16	9/16-5/8 Socket	1192907	-	-	-
1039441	5/8	16	2.85	34.9	8.59	1.28	2.38	1.28	.68	5.38	1.14	7.25	1.16	9/16-5/8 Socket	1192907	-	-	-
1039469	3/4	18-20	5.00	43.5	10.25	1.57	2.88	1.49	.80	6.44	1.33	8.63	1.42	3/4 Socket	1192925	-	-	-
1039487	7/8	22	6.80	51.5	11.87	1.71	3.12	1.73	.94	7.50	1.53	10.09	1.55	7/8 Socket	1192943	-	-	-
1039502	1	24-26	10.40	71.4	13.56	2.00	3.62	2.11	1.07	8.63	1.78	11.50	1.80	1 Socket	1192961	-	-	-
1039520	1-1/8	28	14.82	83.3	15.03	2.26	4.00	2.37	1.19	9.75	2.03	12.75	2.05	1-1/8 Socket	1192989	-	-	-
1039548	1-1/4	32	21.57	109	16.94	2.54	4.50	2.62	1.34	10.81	2.25	14.38	2.30	1-1/4 Socket	1193005	-	-	-
1039566	1-3/8	34-36	28.54	136	18.59	2.82	5.00	2.62	1.46	11.88	2.29	15.75	2.56	1-3/8 Socket	1193023	-	-	-
1039584	1-1/2	38-40	38.06	181	20.13	3.09	5.38	2.87	1.59	12.81	2.56	17.00	2.81	1-1/2 Socket	1193041	1191267	1195355	1195192
1039600	1-3/4	44	51.00	228	23.56	3.41	6.25	3.63	1.87	15.06	3.08	20.00	3.06	1-3/4 Socket	1193069	1191276	1195367	1195209
1042589	2	48-52	89.25	272	27.13	3.96	7.25	3.88	2.12	17.06	3.31	23.00	3.56	2 Socket	1193087	1191294	1195379	1195218

Maximum Proof Load shall not exceed 50% of XXIP rope catalog breaking strength. *The Ultimate Loads of 3/4" through 1 1/4" sizes have been increased to meet the requirements for 8 strand 2160 Grade pendants. Note: Fittings designed only to be used on exact sizes listed.

NOTE: Before using any Crosby fitting with any other type lay, construction or grade of wire rope, it is recommended that the termination be destructive tested and documented to prove the adequacy of the assembly to be manufactured.

© 2025 Kito Crosby. All Rights Reserved.

Crosby®

S-409

- Swage button terminations have an efficiency rating of 98% based on the catalog strength of wire rope.
- Special processed, low carbon steel.
- COLD TUFF® for better swageability.
- Stamp for identification after swaging without concern for fractures (as per directions in the Wire Rope End Terminations User's Manual).
- S-409 Buttons are recommended for use with 6 x 19 or 6 x 37, IPS or XIP (EIP), RRL, FC or IWRC wire rope. Before using any National Swage fitting with any other type lay, construction or grade of wire rope, it is recommended that the termination be destructive tested and documented to prove the adequacy of the assembly to be manufactured.

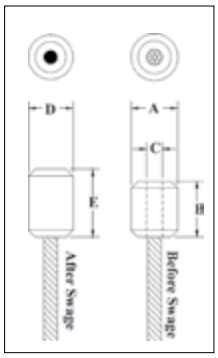

S-409 COLD TUFF® Buttons

S-409 Steel Swage Button Specifications										Swager / Die Data	
		Rope Size			Before Swage Dimensions (in)			After Swage Dimensions (in)			
S-409 Stock No.	Size No.	(in)	(mm)	Weight Per 100 (lb)	A	B	C	D Maximum After Swage Dimensions	E Length*	Die Description	Stock No. 500 Tons 1000 Tons 1500 Tons 5 x 7
1040171	1 SB	1/8	3	2	.42	.50	.14	.40	.61	1/8 - 1/4 Button	1191621
1040215	3 SB	3/16	5	4	.56	.70	.20	.52	.84	1/4 1st Stage	1197528
1040251	5 SB	1/4	6-7	8	.68	1.06	.31	.58	1.41	1/8 - 1/4 Button	1191621
1040297	7 SB	5/16	8	16	.88	1.13	.36	.77	1.33	3/8 1st Stage	1192364
1040313	8 SB	3/8	9-10	15	.88	1.48	.42	.77	1.69	3/8 1st stage	1192364
1040331	9 SB	7/16	11	30	1.13	1.63	.48	1.03	1.94	1/2 1st Stage	1192408
1040359	10 SB	1/2	13	50	1.31	1.89	.55	1.16	2.17	5/8 Socket	1192907
1040377	11 SB	9/16	14	70	1.44	2.02	.61	1.29	2.41	9/16 -5/8 Button	1191665
1040395	12 SB	5/8	16	100	1.56	2.42	.67	1.42	2.89	3/4 Socket	1192925
1040411	13 SB	3/4	18-20	131	1.68	2.74	.80	1.55	3.25	3/4 1st Stage	1192462
1040439	14 SB	7/8	22	220	2	3.27	.94	1.80	3.86	7/8 1st Stage	1192480
1040457	15 SB	1	25-26	310	2.25	3.67	1.06	2.05	4.36	1 1st Stage	1192505
1040475	16 SB	1-1/8	28-29	450	2.56	4.05	1.19	2.30	4.81	1-1/8 1st Stage	1192523
1040493	17 SB	1-1/4	31-32	650	2.81	4.57	1.33	2.56	5.42	1-3/8 Socket	1193023

* NOTE: Length is measured from outside end of termination. Fittings designed only to be used on exact sizes listed.

S-506

- For turnback wire rope splicing.
- Special processed low carbon steel.
- Turnback terminations have efficiency ratings of 94% based on the catalog strength of wire rope.
- COLD TUFF® for better swageability and low temperature toughness.
- S-506 Sleeves are recommended for use with 6 x 19 or 6 x 37, IPS or XIP (EIP), RRL, FC or IWRC wire rope. Before using any National Swage fitting with any other type lay, construction or grade of wire rope, it is recommended that the termination be destructive tested and documented to prove the adequacy of the assembly to be manufactured.
- Resists cracking when swaged (equals or exceeds stainless steel sleeves).
- Stamp for identification after swaging without concern for fractures (as per directions in the Wire Rope End Termination User's Manual).

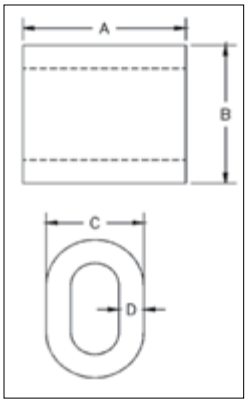

S-506 COLD TUFF® Duplex Non-Tapered Sleeves

S-506 Steel Duplex Non-Tapered Sleeve Specifications										Swager / Die Data	
	Rope Size				Before Swage Dimensions (in)						
S-506 Stock No.	(in)	(mm)	Weight Per 100 (lb)	Pkg. Qty.	A	B	C	D	Max. After Swage Dimensions (in)	Die Description	Stock No. 500 Tons 1000 Tons 1500 Tons 5 x 7
1039334	5/16	8	17	200	1.25	1.06	.81	.19	.77	3/8 1st Stage	1192364
1039352	3/8	9-10	13	100	1.25	1.12	.81	.14	.77	3/8 1st Stage	1192364
1039370	7/16	11	31	50	1.63	1.41	1.02	.19	1.03	1/2 1st Stage	1192408
1039398	1/2	13	27	50	1.63	1.44	1.02	.16	1.03	1/2 1st Stage	1192408
1039414	9/16	14	63	25	2.25	1.72	1.23	.23	1.29	5/8 1st Stage	1192444
1039432	5/8	16	54	25	2.25	1.84	1.28	.20	1.29	5/8 1st Stage	1192444
1039450	3/4	18-20	91	10	2.63	2.16	1.52	.23	1.55	3/4 1st Stage	1192462
1039478	7/8	22	126	10	2.88	2.50	1.75	.27	1.80	7/8 1st Stage	1192480
1039496	1	25-26	187	10	3.06	2.84	2.00	.33	2.05	1 1st Stage	1192505

Note: Fittings designed only to be used on exact sizes listed.

© 2025 Kito Crosby. All Rights Reserved.

2013 EDITION

MUNCY™ INDUSTRIES

Catalog & User's Manual

Inspiring Confidence

Buttons and End Fittings

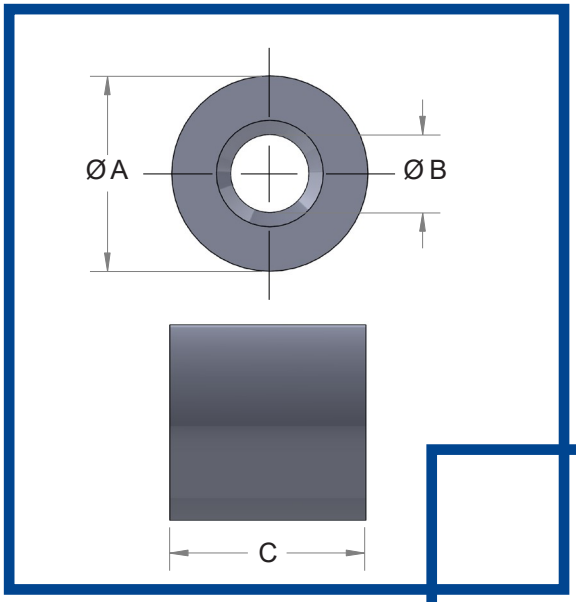

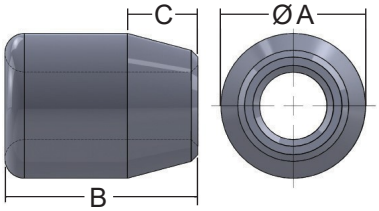

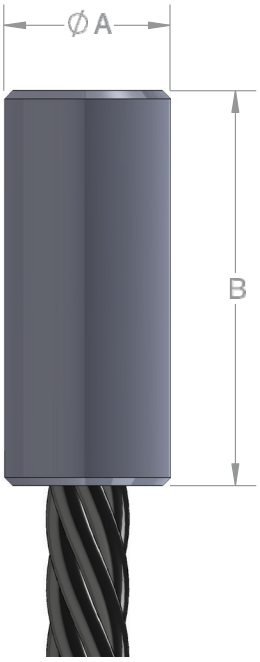

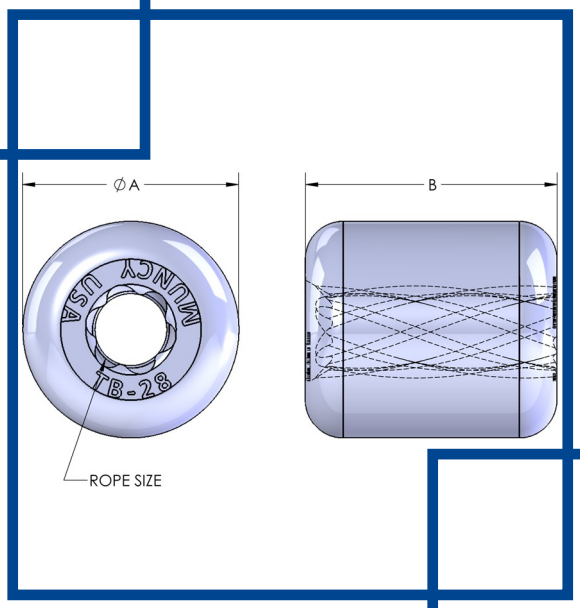

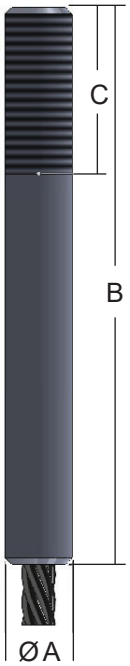

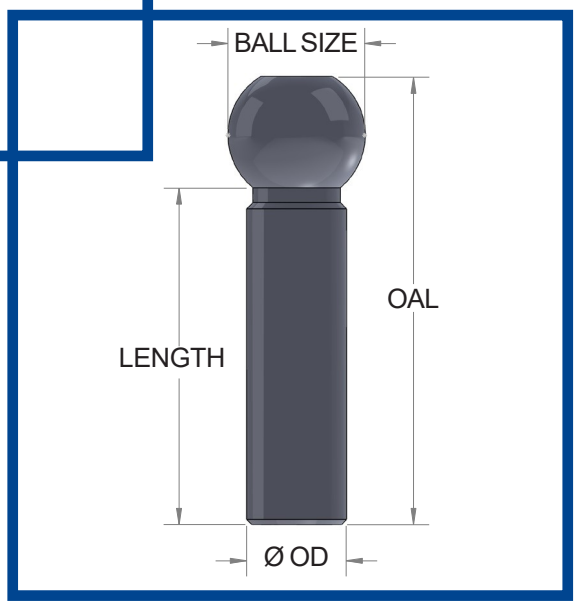

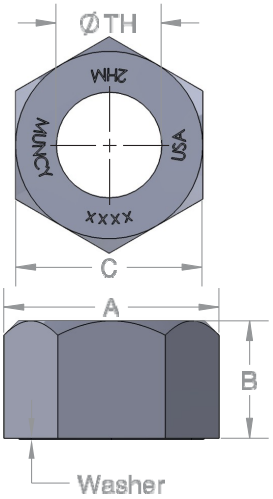

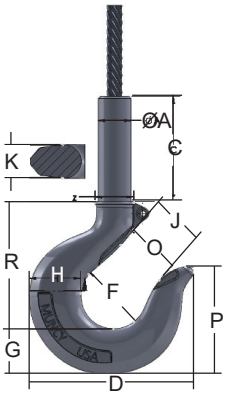

BB Buttons

Stock No.	Rope Dia.	After Swage Dimension				Weight lbs. Each
		Min	A Nominal	Max	B Approx.	
BB-8	1/4	0.490	**.500**	.510	1-1/32	0.04
BB-10	5/16	0.615	**.625**	.635	1-1/4	0.08
BB-12	3/8	0.740	**.750**	.770	1-1/2	0.15
BB-14	7/16	0.855	**.875**	.895	1-7/8	0.24
BB-16	1/2	0.980	**1.000**	1.030	2	0.34
BB-18	9/16	1.040	**1.063**	1.090	2-7/16	0.52
BB-20	5/8	1.230	**1.250**	1.290	2-3/4	0.79
BB-24	3/4	1.480	**1.500**	1.550	3-1/4	1.35
BB-28	7/8	1.730	**1.750**	1.800	3-7/8	2.18
BB-32	1	1.980	**2.000**	2.050	4-23/64	3.23

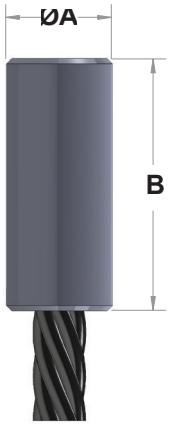

- ✓ Carbon Steel.
- ✓ Specially treated for swaging.
- ✓ Stocked .
- ✓ Also available in Stainless Steel see pg 19.

CAUTION

BB Buttons are recommended for use on 6 x 19 or 6 x 37 IPS or XIP, EIP, XXIP, EEIP IWRC regular lay ropes. Not all BB Buttons are designed to hold the breaking strength of the wire rope. Before using BB Buttons with any other type lay, construction, or grade of wire rope, it is recommended that a test assembly be destructively tested to prove the adequacy of the assembly.

CB Buttons

Stock No.	Rope Dia.	After Swage Dimension				Weight lbs. Each
		Min	A Nominal	Max	B Approx.	
CB-4	1/8	0.240	**0.250**	0.260	0.625	0.01
CB-6	3/16	0.365	**0.375**	0.400	0.813	0.02
CB-8	1/4	0.490	**0.500**	0.520	1.125	0.06
CB-10	5/16	0.615	**0.625**	0.635	1.250	0.08
CB-12	3/8	0.740	**0.750**	0.770	1.563	0.15
CB-14	7/16	0.855	**0.875**	0.895	1.750	0.24
CB-16	1/2	0.980	**1.000**	1.030	1.875	0.34
CB-18	9/16	1.105	**1.125**	1.160	1.500	0.34
CB-20	5/8	1.230	**1.250**	1.290	2.750	0.79
CB-24	3/4	1.480	**1.500**	1.550	3.250	1.35
CB-28	7/8	1.730	**1.750**	1.800	3.875	2.18
CB-32	1	1.980	**2.000**	2.050	4.360	3.23
CB-36	1-1/8	2.220	**2.250**	2.300	5.000	4.60
CB-40	1-1/4	2.470	**2.500**	2.560	5.500	6.27

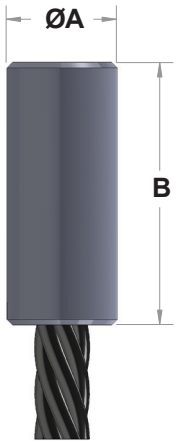

- ✓ Carbon Steel.
- ✓ Specially treated for swaging.
- ✓ Stocked .
- ✓ Also available in Stainless Steel see pg 19.

CAUTION

CB Buttons are recommended for use with 6 x 19 or 6 x 37 IPS or XIP, EIP IWRC regular lay ropes. Not all CB Buttons are designed to hold the breaking strength of the wire rope. Before using a CB Button for any type lay, construction or grade of wire rope, it is recommended that a test assembly be destructively tested to prove the adequacy of the assembly.

G Buttons

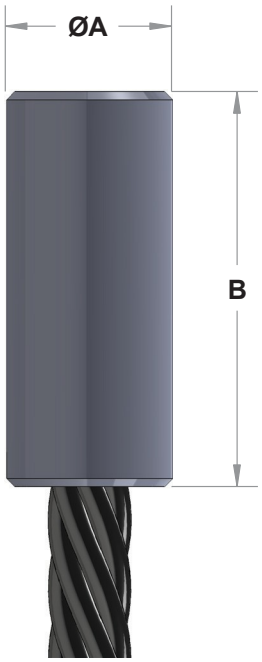

Stock No.	Rope Dia.	After Swage Dimension					Weight lbs. Each
		Min	A Nominal		Max	B Approx.	
G6-8	3/16	0.490	**1/2**	**0.500**	0.520	0.813	0.04
G6-12	3/16	0.740	**3/4**	**0.750**	0.770	1.125	0.14
G7-5	7/32	0.553	**9/16**	**0.563**	0.573	0.938	0.06
G8-4*	1/4	0.428	**7/16**	**0.438**	0.448	1.250	0.04
G8-8	1/4	0.490	**1/2**	**0.500**	0.510	1.000	0.04
G8-14	1/4	0.490	**1/2**	**0.500**	0.510	1.125	0.05
G8-16	1/4	0.490	**1/2**	**0.500**	0.510	1.500	0.06
G8-20	1/4	0.615	**5/8**	**0.625**	0.635	0.875	0.07
G8-24	1/4	0.615	**5/8**	**0.625**	0.635	1.250	0.10
G8-28	1/4	0.615	**5/8**	**0.625**	0.635	1.500	0.12
G8-32	1/4	0.740	**3/4**	**0.750**	0.770	1.125	0.13
G8-36	1/4	0.740	**3/4**	**0.750**	0.770	1.250	0.15
G8-40	1/4	0.740	**3/4**	**0.750**	0.770	1.500	0.18
G8-44	1/4	0.855	**7/8**	**0.875**	0.895	1.000	0.17
G8-48	1/4	0.855	**7/8**	**0.875**	0.895	1.125	0.19
G8-52	1/4	0.855	**7/8**	**0.875**	0.895	1.250	0.21
G8-56	1/4	0.855	**7/8**	**0.875**	0.895	1.500	0.26
G8-60	1/4	0.980	**1**	**1.000**	1.020	1.125	0.26
G8-64	1/4	0.980	**1**	**1.000**	1.020	1.250	0.28
G8-68	1/4	0.980	**1**	**1.000**	1.020	1.500	0.32
G8-72*	1/4	0.980	**1**	**1.000**	1.020	2.000	0.45
G8-76	1/4	1.230	**1-1/4**	**1.250**	1.290	1.750	0.64
G9-5	9/32	0.615	**5/8**	**0.625**	0.635	1.125	0.08
G10-3	5/16	0.740	**3/4**	**0.750**	0.770	1.250	0.13
G10-4	5/16	0.855	**7/8**	**0.875**	0.895	0.875	0.14
G10-8	5/16	0.855	**7/8**	**0.875**	0.895	1.000	0.16
G10-12	5/16	0.855	**7/8**	**0.875**	0.895	1.250	0.20
G10-16	5/16	0.855	**7/8**	**0.875**	0.895	1.500	0.25
G10-20	5/16	0.855	**7/8**	**0.875**	0.895	2.000	0.33
G10-24	5/16	0.980	**1**	**1.000**	1.020	1.438	0.31
G10-28	5/16	0.980	**1**	**1.000**	1.020	1.500	0.32
G12-3	3/8	0.855	**7/8**	**0.875**	0.895	1.500	0.23
G12-4	3/8	0.980	**1**	**1.000**	1.020	1.500	0.32
G12-5	3/8	0.980	**1**	**1.000**	1.020	1.000	0.30
G12-8*	3/8	0.980	**1**	**1.000**	1.020	1.750	0.36
G12-12	3/8	0.980	**1**	**1.000**	1.020	2.000	0.41
G12-16	3/8	1.230	**1-1/4**	**1.250**	1.270	2.000	0.69
G14-1	7/16	0.855	**7/8**	**0.875**	0.895	1.625	0.23
G14-2	7/16	0.980	**1**	**1.000**	1.030	1.375	0.27
G14-3	7/16	0.980	**1**	**1.000**	1.030	1.500	0.32
G14-8	7/16	1.105	**1-1/8**	**1.125**	1.145	1.750	0.34
G16-2	1/2	0.980	**1**	**1.000**	1.020	1.750	0.33
G16-3	1/2	1.105	**1-1/8**	**1.125**	1.160	2.000	0.50
G16-4	1/2	1.230	**1-1/4**	**1.250**	1.270	1.250	0.40
G16-5	1/2	1.230	**1-1/4**	**1.250**	1.270	1.750	0.57
G20-3	5/8	1.355	**1-3/8**	**1.375**	1.420	2.500	0.93
G24-4	3/4	1.480	**1-1/2**	**1.500**	1.550	2.000	0.93
G28-2	7/8	1.730	**1-3/4**	**1.750**	1.800	2.500	1.50
G28-4	7/8	1.730	**1-3/4**	**1.750**	1.800	2.791	1.61
G28-8	7/8	1.730	**1-3/4**	**1.750**	1.800	3.000	1.74

- ✓ Carbon Steel.
- ✓ Specially treated for swaging.
- ✓ Stocked .
- ✓ Also available in Stainless Steel upon request.

CAUTION

G Buttons are modeled after special use buttons. G Buttons are recommended for use with 6 x 19 or 6 x 37 IPS or XIP, EIP, IWRC regular lay ropes. G Buttons are not necessarily designed to hold the breaking strength of the attached wire rope. Before using a G Button for any type lay, construction or grade of wire rope, it is recommended that a test assembly be destructively tested to prove the adequacy of the assembly. The efficiency of G Buttons are not rated.

All dimensions are subject to tolerance.

NB Buttons

Stock No.	Rope Dia.	After Swage Dimension A Min	A Nominal		A Max	B Approx.	Weight lbs. Each
NB-4	1/8	0.365	**3/8**	**0.375**	0.400	0.625	0.02
NB-5	5/32	0.428	**7/16**	**0.438**	0.448	0.750	0.03
NB-6	3/16	0.490	**1/2**	**0.500**	0.520	0.875	0.04
NB-7	7/32	0.553	**9/16**	**0.563**	0.573	1.000	0.06
NB-8	1/4	0.553	**9/16**	**0.563**	0.580	1.188	0.07
NB-10	5/16	0.740	**3/4**	**0.750**	0.770	1.375	0.15
NB-12	3/8	0.740	**3/4**	**0.750**	0.770	1.750	0.18
NB-14	7/16	0.980	**1**	**1.000**	1.030	2.000	0.39
NB-16	1/2	1.105	**1-1/8**	**1.125**	1.160	2.188	0.59
NB-18	9/16	1.230	**1-1/4**	**1.250**	1.290	2.438	0.74
NB-20	5/8	1.355	**1-3/8**	**1.375**	1.420	2.875	1.06
NB-24	3/4	1.480	**1-1/2**	**1.500**	1.550	3.250	1.35
NB-28	7/8	1.730	**1-3/4**	**1.750**	1.800	3.875	2.18
NB-32	1	1.980	**2**	**2.000**	2.050	4.375	3.23
NB-36	1-1/8	2.220	**2-1/4**	**2.250**	2.300	4.813	4.60
NB-40	1-1/4	2.470	**2-1/2**	**2.500**	2.560	5.438	6.27
NB-44	1-3/8	2.720	**2-3/4**	**2.750**	2.810	6.000	8.46
NB-48	1-1/2	2.970	**3**	**3.000**	3.060	6.500	10.98

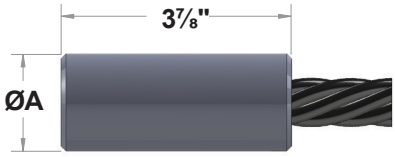

- ✓ Carbon Steel.
- ✓ Specially treated for swaging.
- ✓ Stocked .
- ✓ Also available in Stainless Steel see pg 19.

CAUTION

NB Buttons are recommended for use with 6 x 19 or 6 x 37 IPS, XIP, EIP IWRC regular lay ropes. Before using an NB Button for any other type lay, construction, or grade of wire rope, it is recommended that a test assembly be destructively tested to prove the adequacy of the assembly.

SB Buttons

Stock No.	Rope Dia.	After Swage Dimension A Min	A Nominal		A Max	B Approx.	Weight lbs. Each
SB-4	1/8	0.365	**3/8**	**0.375**	0.400	0.625	0.02
SB-5	5/32	0.428	**7/16**	**0.438**	0.448	0.750	0.03
SB-6	3/16	0.490	**1/2**	**0.500**	0.520	0.875	0.04
SB-7	7/32	0.553	**9/16**	**0.563**	0.573	1.000	0.06
SB-8	1/4	0.615	**5/8**	**0.625**	0.635	1.125	0.09
SB-9	9/32	0.678	**11/16**	**0.688**	0.698	1.375	0.11
SB-10	5/16	0.740	**3/4**	**0.750**	0.770	1.500	0.17
SB-12	3/8	0.855	**7/8**	**0.875**	0.895	1.750	0.27
SB-14	7/16	0.980	**1**	**1.000**	1.030	2.000	0.39
SB-16	1/2	1.105	**1-1/8**	**1.125**	1.160	2.375	0.59
SB-18	9/16	1.230	**1-1/4**	**1.250**	1.290	2.625	0.80
SB-20	5/8	1.355	**1-3/8**	**1.375**	1.420	2.875	1.06
SB-24	3/4	1.480	**1-1/2**	**1.500**	1.550	3.500	1.46
SB-28	7/8	1.730	**1-3/4**	**1.750**	1.800	4.125	2.32
SB-32	1	1.980	**2**	**2.000**	2.050	4.750	3.53
SB-36	1-1/8	2.220	**2-1/4**	**2.250**	2.300	5.250	5.00
SB-40	1-1/4	2.470	**2-1/2**	**2.500**	2.560	5.875	6.79
SB-44	1-3/8	2.720	**2-3/4**	**2.750**	2.810	6.500	9.24
SB-48	1-1/2	2.970	**3**	**3.000**	3.060	7.125	11.97

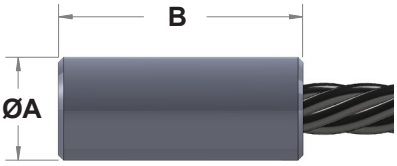

- ✓ Carbon Steel.
- ✓ Specially treated for swaging.
- ✓ Stocked .
- ✓ Also available in Stainless Steel see pg 19.

CAUTION

SB Buttons are modeled after Wire Rope Technical Board's Specifications. SB Buttons are recommended for use with 6 x 19 or 6 x 37 IPS, XIP, EIP IWRC regular lay ropes. Wire Rope. Before using an SB Button for any other type lay, construction, or grade of wire rope,it is recommended that a test assembly be destructively tested to prove the adequacy of the assembly.

Drumline Buttons

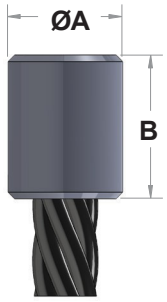

Stock No.	Rope Dia.	After Swage Dimensions					Weight lbs. Each
		A				B	
		Min	Nominal		Max	Approx.	
DB-48	1-1/2	2.690	2-3/4	2.750	2.810	3-3/8	4.45
DB-56	1-3/4	2.690	2-3/4	2.750	2.810	3-3/8	4.07
DB-64	2	3.440	3-1/2	3.500	3.560	4-3/8	6.33
DB-68	2-1/8	3.440	3-1/2	3.500	3.560	4-3/8	6.03
DB-72	2-1/4	3.440	3-1/2	3.500	3.560	4-3/8	5.84
DB-80	2-1/2	3.938	4	4.000	4.063	4-3/4	7.69
DB-84	2-5/8	4.063	4-1/8	4.125	4.188	4-3/4	7.44
DB-88	2-3/4	4.063	4-1/8	4.125	4.188	5	7.59

- ✓ Carbon Steel.
- ✓ Specially treated for swaging.
- ✓ Stocked .
- ✓ Also available in Stainless Steel upon request.
- ✓ Commonly used for seizing wire rope.

*** Smaller sizes available upon request**

CAUTION

Drumline Buttons are not intended to hold the breaking strength of the attached wire rope. Testing is recommended.

Stainless Steel Swage Buttons

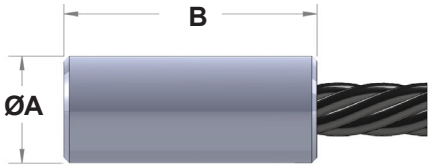

- ✓ Stocked in 304 Stainless Steel .
- ✓ Available in 316 Stainless Steel upon request.
- ✓ Specially treated for swaging.

Stock No.	Rope Size	After Swage Dimensions					Weight lbs. Each
		A				B	
		Min.	Nominal		Max.		
SB-4-SS	1/8	0.365	**3/8**	**0.375**	0.400	0.625	0.020
SB-5-SS	5/32	0.428	**7/16**	**0.438**	0.448	0.750	0.032
SB-6-SS	3/16	0.490	**1/2**	**0.500**	0.520	0.875	0.043
SB-7-SS	7/32	0.553	**9/16**	**0.563**	0.573	1.000	0.062
SB-8-SS	1/4	0.615	**5/8**	**0.625**	0.635	1.125	0.085
SB-10-SS	5/16	0.740	**3/4**	**0.750**	0.770	1.500	0.165
SB-12-SS	3/8	0.855	**7/8**	**0.875**	0.895	1.750	0.271
SB-14-SS	7/16	0.980	**1**	**1.000**	1.130	2.000	0.385
SB-16-SS	1/2	1.105	**1-1/8**	**1.125**	1.160	2.375	0.585
SB-18-SS	9/16	1.230	**1-1/4**	**1.250**	1.290	2.625	0.802
SB-20-SS	5/8	1.355	**1-3/8**	**1.375**	1.425	2.875	1.065
SB-24-SS	3/4	1.480	**1-1/2**	**1.500**	1.550	3.500	1.457
SB-28-SS	7/8	1.730	**1-3/4**	**1.750**	1.800	4.125	2.320
SB-32-SS	1	1.980	**2**	**2.000**	2.050	4.750	3.525
SB-36-SS	1-1/8	2.220	**2-1/4**	**2.250**	2.300	5.250	5.000
SB-40-SS	1-1/4	2.470	**2-1/2**	**2.500**	2.560	5.875	6.790
SB-44-SS	1-3/8	2.720	**2-3/4**	**2.750**	2.780	6.500	9.240
SB-48-SS	1-1/2	2.970	**3**	**3.000**	3.030	7.125	11.970

Stock No.	Rope Size	After Swage Dimensions					Weight lbs. Each
		A				B	
		Min.	Nominal		Max.		
NB-4-SS	1/8	0.365	**3/8**	**0.375**	0.400	0.625	0.020
NB-5-SS	5/32	0.428	**7/16**	**0.438**	0.448	0.750	0.032
NB-6-SS	3/16	0.490	**1/2**	**0.500**	0.520	0.875	0.043
NB-7-SS	7/32	0.553	**9/16**	**0.563**	0.573	1.000	0.062
NB-8-SS	1/4	0.553	**5/8**	**0.625**	0.533	1.188	0.070
NB-10-SS	5/16	0.740	**3/4**	**0.750**	0.770	1.375	0.152
NB-12-SS	3/8	0.740	**7/8**	**0.750**	0.770	1.750	0.180
NB-14-SS	7/16	0.980	**1**	**1.000**	1.030	2.000	0.386
NB-16-SS	1/2	1.105	**1-1/8**	**1.125**	1.160	2.188	0.585
NB-18-SS	9/16	1.230	**1-1/4**	**1.250**	1.290	2.438	0.744
NB-20-SS	5/8	1.355	**1-3/8**	**1.375**	1.420	2.875	1.062
NB-24-SS	3/4	1.480	**1-1/2**	**1.500**	1.550	3.250	1.353
NB-28-SS	7/8	1.730	**1-3/4**	**1.750**	1.800	3.875	2.175
NB-32-SS	1	1.980	**2**	**2.000**	2.050	4.375	3.230
NB-36-SS	1-1/8	2.220	**2-1/4**	**2.250**	2.300	4.813	4.595
NB-40-SS	1-1/4	2.470	**2-1/2**	**2.500**	2.560	5.438	6.270
NB-44-SS	1-3/8	2.720	**2-3/4**	**2.750**	2.81	6.000	8.460
NB-48-SS	1-1/2	2.970	**3**	**3.000**	3.060	6.500	10.980

CAUTION

Stainless Steel Swage Buttons are recommended for use with 6 x 19 or 6 x 37 Stainless Steel RRL IWRC wire ropes. Before using Stainless Steel Swage Buttons on any other lay, construction, or grade of wire rope, it is recommended that a test assembly be destructively tested to prove the adequacy of the assembly.

All dimensions are subject to tolerance.

Logging Ferrules

Stock No.	Rope Dia.	After Swage Dimensions				Before Swage		Weight lbs. Each
		A				B	C	
		Min	Nominal		Max	Approx.	Approx.	
LF-12	3/8	1.136	**1-5/32**	**1.156**	1.176	1.500	0.697	0.38
LF-14	7/16	1.136	**1-5/32**	**1.156**	1.176	1.500	0.587	0.35
LF-16S	1/2	1.136	**1-5/32**	**1.156**	1.176	1.430	0.697	0.33
LF-16L	1/2	1.136	**1-5/32**	**1.156**	1.176	1.500	0.697	0.33
LF-18S	9/16	1.136	**1-5/32**	**1.156**	1.176	1.400	0.697	0.31
LF-18L	9/16	1.136	**1-5/32**	**1.156**	1.176	1.500	0.697	0.32
LF-20D	5/8	1.480	**1-1/2**	**1.500**	1.520	2.000	0.730	0.86
LF-24A	3/4	1.480	**1-1/2**	**1.500**	1.520	2.000	0.730	0.72
LF-24	3/4	1.520	**1-35/64**	**1.547**	1.560	2.250	0.910	1.17
LF-28	7/8	1.520	**1-35/64**	**1.547**	1.560	2.250	0.910	1.06

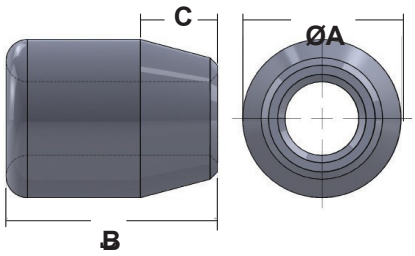

- ✓ Carbon Steel.
- ✓ Specially treated for swaging.
- ✓ Stocked .
- ✓ Also available in Stainless Steel upon request.

CAUTION

Logging Ferules are NOT intended to hold the breaking strength of the attached wire rope. Testing is recommended.

MUNCY INDUSTRIES

IN STOCK

Turbotville, PA & Lafayette, LA

Fill Factor Comparison:

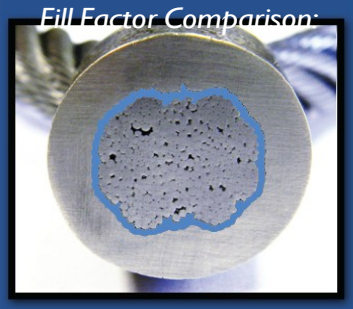

Competitors

Muncy Industries

Stainless Steel One Piece Sleeve

- Maximized cross sectional fill factor.
- Maximized wire rope to sleeve contact by unique hourglass shape.
- Minimizes wire notching within the wire rope.
- Eliminates the "valley" produced during swaging.
- Precision cast for better reliability.
- Hourglass shape helps keep rope in place during swaging.
- Traceable.

Inspiring Confidence.

USA

Wedge Buttons

Stock No.	Rope Size	Color	Wedge Part Number	A	B
M3	3/8", 7/16"	Silver	4	1.375	1.130
M4	1/2", 9/16"	Baby Blue	4	1.375	1.130
D5	9/16", 5/8"	Pink	5	1.750	1.500
B5	9/16", 5/8"	Maroon	5	2.000	1.700
B6	3/4"	Grey	6	2.000	1.700
L6	3/4"	White	6	2.625	2.125
L7	7/8"	Black	7	2.625	2.125
L8	1"	Green	8	2.625	2.125
J7	7/8"	Red	7	2.750	2.450
J8	1"	Navy	8	2.750	2.450
J9	1-1/8"	Yellow	9	2.575	2.380
J10	1-1/4"	Orange	10	2.750	2.455

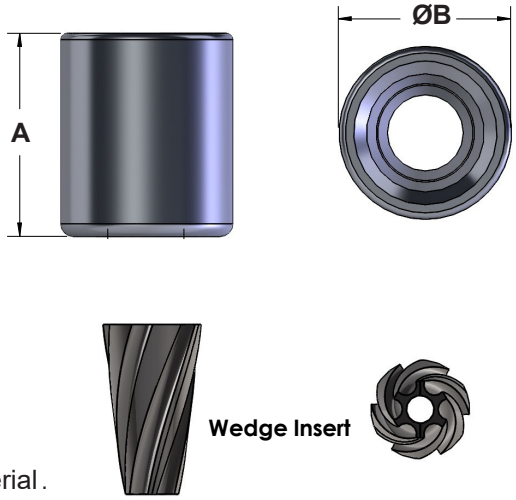

- ✓ High quality casting.
- ✓ Field applied.
- ✓ Domestic material.
- ✓ Comes with 2 part wedge.
- ✓ Use Wedges or by pouring.

CAUTION

Wedge Buttons are recommended for use with EIP, IWRC, or FC right regular lay wire ropes. When using wedges, wedge buttons are designed for 6 strand right lay ropes ONLY. Because this product will be commonly used by end users in the field, please refer end users to proper procedures as stated in Muncy™ manuals, catalogs, and other technical manuals. DO NOT use for overhead lifting.

Spelter Buttons

Part No.	Rope Size	A	B
M3	3/8", 7/16"	1.375	1.130
M4	1/2", 9/16"	1.375	1.130
D5	9/16", 5/8"	1.750	1.500
B5	9/16", 5/8"	2.000	1.700
B6	3/4"	2.000	1.700
L7	7/8"	2.625	2.125
L8	1"	2.625	2.125
J7	7/8"	2.750	2.450
J8	1"	2.750	2.450
J9	1-1/8"	2.575	2.380
J10	1-1/4"	2.750	2.455

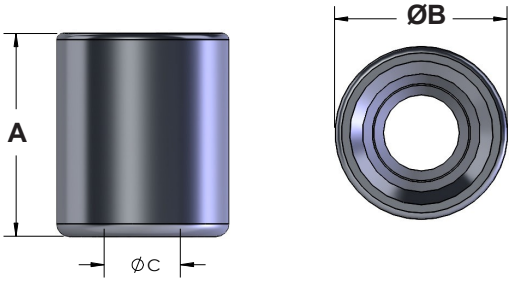

- ✓ For use with zinc or resin.
- ✓ Can be field applied.
- ✓ Domestic material.

CAUTION

Spelter Buttons are recommended for use with 6 x 7, 9 x 16, 6 x 37 IPS, XIP(EIP), RRL, FC, IWRC wire ropes. Before using on any other lay, construction, or grade of wire rope, it is recommended that the termination be proof loaded to prove the adequacy of the assembly.

MADE IN USA

All dimensions are subject to tolerance.

Twist-On™ Buttons

- ✓ High quality casting.
- ✓ Wire rope imprint to enhance assembly efficiency.
- ✓ Shorter button length, higher strength.
- ✓ Domestic material.
- ✓ Rated for direct loads.

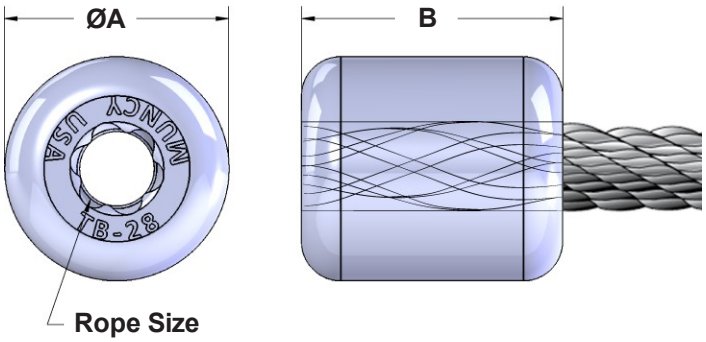

Stock No.	Rope Dia.	After Swage Dimension				Weight lbs. Each
		A Min	A Nominal	A Max	B Approx.	
TB-24	3/4	1.970	**2.000**	2.050	2.65	2.1
TB-28	7/8	1.970	**2.000**	2.050	3.11	2.4
TB-32	1	1.970	**2.000**	2.050	3.60	2.5

CAUTION

Muncy™ Twist-On™ Buttons are recommended for use on 6 x 7, 6 x 19, and 6 x 37 IPS, XIP(EIP), XXIP (EEIP), RRL, IWRD wire rope. Before using on any other wire rope lay, construction, or grade of wire rope, it is recommended that a test assembly be destructively tested to prove the adequacy of the assembly.

Aluminum Button Stop

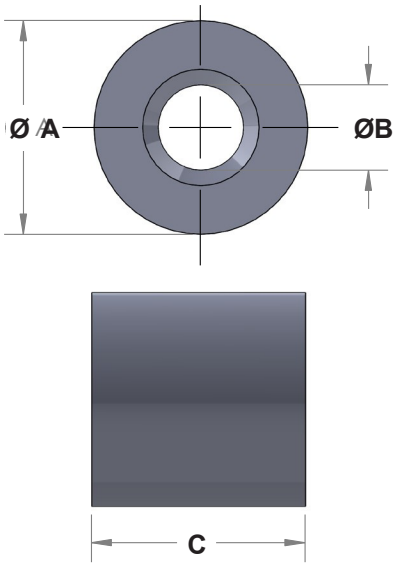

Stock No.	Rope Size	Dimensions				Weight lbs. Per 1,000
		A	B	C		
AB-2	1/16	0.250	0.078	5/32	0.156	0.63
AB-2-5	5/64	0.250	0.094	5/32	0.156	0.64
AB-3	3/32	0.344	0.112	5/16	0.313	2.50
AB-4	1/8	0.344	0.152	5/16	0.313	2.10
AB-5	5/32	0.437	0.185	11/32	0.344	4.20
AB-6	3/16	0.437	0.216	11/32	0.344	3.90
AB-7	7/32	0.437	0.250	11/32	0.344	3.20
AB-8	1/4	0.688	0.281	11/16	0.688	20.40
AB-9	9/32	0.688	0.312	11/16	0.688	19.10
AB-10	5/16	0.688	0.375	11/16	0.688	17.00
AB-12	3/8	0.688	0.406	11/16	0.688	16.00

CAUTION

Upson-Walton Aluminum Button Stops are not intended to hold the breaking strength of the attached wire rope. Aluminum fittings on Carbon Steel Wire Rope may be subject to accelerated corrosion due to the unlike metals. Testing is recommended.

USA

Threaded Sleeves

Stock No.	Rope Dia.	After Swage A Min.	After Swage A Max.	After Swage B	Thread Length *TL	Thread Length Tolerance	Weight lbs. Each
SS-6	3/16	0.365	0.375	1-3/4	1	.063 -.000	0.05
SS-7	7/32	0.423	0.438	2	1-1/4	+.125 -.000	0.07
SS-8	1/4	0.485	0.500	2	1-1/4		0.09
SS-10	5/16	0.610	0.625	2-1/2	1-1/2		0.18
SS-12	3/8	0.735	0.750	3	1-3/4		0.31
SS-14	7/16	0.860	0.875	3-1/2	2		0.51
SS-16	1/2	0.885	1.000	4	2-1/4		0.73
SS-18	9/16	1.100	1.125	4-1/2	2-1/2		1.08
SS-20	5/8	1.225	1.250	5	2-3/4	+.188 -.000	1.48
SS-24	3/4	1.475	1.500	6	3		2.51
SS-28	7/8	1.725	1.750	7	4		3.98
SS-32	1	1.975	2.000	8	5		6.00
SS-36	1-1/8	2.225	2.250	9	6		8.54
SS-40	1-1/4	2.475	2.500	10	7		11.73
SS-44	1-3/8	2.725	2.750	11	8		15.76
SS-48	1-1/2	2.975	3.000	12	9		20.25

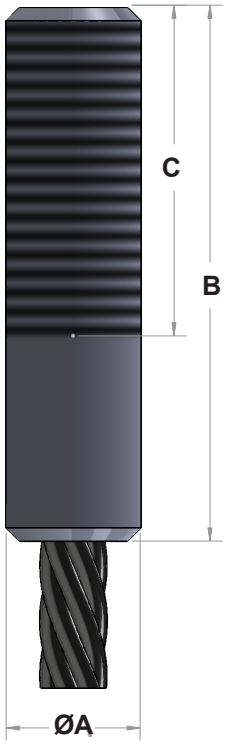

- ✓ Carbon Steel.
- ✓ Specially treated for swaging.
- ✓ Stocked .
- ✓ Also available in Stainless Steel upon request.

*Muncy threaded sleeves are threaded after swaging.

CAUTION

Threaded Sleeves are recommended for use with 6 x 19 or 6 x 37 IPS or XIP, EIP IWRC regular lay ropes. Before using a threaded sleeve for any other type lay, construction, or grade of wire rope, it is recommended that a test assembly be destructively tested to prove the adequacy of the assembly.

All dimensions are subject to tolerance.

TTS Threaded Studs

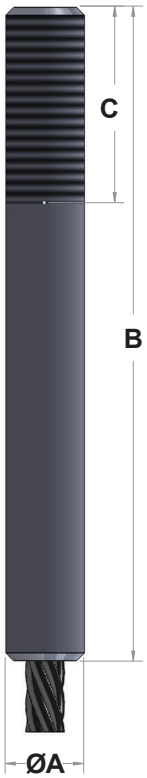

Stock No.	Rope Dia.	After Swage Dimensions					Thread Description			Weight lbs. Each
		A				B	C	NC	NF	
		Min	Nominal		Max	Approx.				
TTS-8	1/4	0.553	9/16	0.563	0.573	4-23/32	1-1/2	9/16"-12	9/16"-18	0.28
TTS-8A	1/4	0.490	1/2	0.500	0.510	4-23/32	1-1/2	1/2"-13	1/2"-20	0.21
TTS-10	5/16	0.615	5/8	0.625	0.650	5-23/32	1-3/4	5/8"-11	5/8"-18	0.41
TTS-10A	5/16	0.615	5/8	0.625	0.650	8-31/32	5	5/8"-11	5/8"-18	0.64
TTS-12	3/8	0.740	3/4	0.750	0.780	6-3/4	2	3/4"-10	3/4"-16	0.72
TTS-12A	3/8	0.740	3/4	0.750	0.780	9-3/4	5	3/4"-10	3/4"-16	1.05
TTS-14	7/16	0.865	7/8	0.875	0.910	7-21/32	2-1/4	7/8"-9	7/8"-14	1.13
TTS-16	1/2	0.990	1	1.000	1.030	8-9/16	2-1/2	1"-8	1"- 12 or 14	1.64
TTS-16A	1/2	0.990	1	1.000	1.030	12-1/16	6	1"-8	1"- 12 or 14	2.40
TTS-18	9/16	1.115	1-1/8	1.125	1.160	9-5/8	2-3/4	1-1/8"-7	1-1/8"-12	2.33
TTS-20	5/8	1.240	1-1/4	1.250	1.280	10-21/32	3-1/8	1-1/4"-7	1-1/4"-12	3.23
TTS-24	3/4	1.490	1-1/2	1.500	1.550	12-11/16	3-3/4	1-1/2"-6	1-1/2"-12	5.51
TTS-28	7/8	1.740	1-3/4	1.750	1.800	14-5/8	4-3/8	1-3/4"-5	1-3/4"-12	8.58
TTS-32	1	1.990	2	2.000	2.050	16-21/32	5	2"- 4-1/2	2"-12	12.60
TTS-36	1-1/8	2.240	2-1/4	2.250	2.300	18-5/8	5-5/8	2-1/4"- 4-1/2	2-1/4"-12	18.00
TTS-40	1-1/4	2.490	2-1/2	2.500	2.560	20-21/32	6-1/4	2-1/2"- 4	2-1/2"- 12	24.69
TTS-44	1-3/8	2.740	2-3/4	2.750	2.810	22-17/32	6-7/8	2-3/4"- 4	2-3/4"-12	33.06
TTS-48	1-1/2	2.990	3	3.000	3.060	24-1/2	7-1/2	3"- 4	3"-12	49.30

- ✓ Carbon Steel.
- ✓ Specially treated for swaging.
- ✓ Stocked .
- ✓ Also available in Stainless Steel upon request.
- ✓ Nuts available.

Note: We stock right-handed N.C. thread. Left-handed and fine thread are available upon special request. Sizes for larger diameter rope can be supplied. All studs supplied without wrench grips unless requested.

CAUTION

TTS Threaded Studs are recommended for use with 6 x 19 or 6 x 37 IWRC regular lay ropes. They are also satisfactory on galvanized bridge rope. Before using studs with any other type lay, construction, or grade of wire rope, it is recommended that a test assembly be destructively tested to prove the adequacy of the assembly.

STS Threaded Studs

Stock No.	Rope Dia.	After Swage Dimensions					Thread Description			Weight lbs. Each
		A				B	C	NC	NF	
		Min	Nominal		Max	Approx.				
STS-4	1/8	0.210	7/32	0.219	0.230	2-3/8	1	1/4"-20	1/4"-28	0.03
STS-6	3/16	0.305	5/16	0.313	0.330	3	1-1/8	3/8"-16	3/8"-24	0.07
STS-8	1/4	0.430	7/16	0.438	0.460	4-1/16	1-1/2	1/2"-13	1/2"-20	0.16
STS-8A	1/4	0.430	7/16	0.438	0.460	5-1/16	2-1/2	1/2"-13	1/2"-20	0.20
STS-10	5/16	0.553	9/16	0.563	0.585	5-1/16	1-7/8	5/8"-11	5/8"-18	0.33
STS-12	3/8	0.615	5/8	0.625	0.650	6-1/4	2-1/4	3/4"-10	3/4"-16	0.58
STS-14	7/16	0.740	3/4	0.750	0.780	7-5/16	2-5/8	7/8"-9	7/8"-14	0.90
STS-16	1/2	0.865	7/8	0.875	0.910	8-1/4	3	1"- 8	1"-12 or 14	1.36
MM56-16	1/2	0.740	3/4	0.750	0.780	6-5/8	2-1/4	7/8"-9	7/8"-14	1.00
STS-18	9/16	0.990	1	1.000	1.030	9-1/4	3-3/8	1-1/8"-7	1-1/8"-12	1.93
STS-20	5/8	1.115	1-1/8	1.125	1.160	10-1/8	3-3/4	1-1/4"-7	1-1/4"-12	2.66
STS-24	3/4	1.365	1-3/8	1.375	1.420	12-13/16	4-1/2	1-1/2"-6	1-1/2"-12	4.56
STS-28	7/8	1.490	1-1/2	1.500	1.550	14-9/16	5-1/4	1-3/4"-5	1-3/4"12	7.14
STS-32	1	1.740	1-3/4	1.750	1.800	16-1/4	6	2"- 4-1/2	2"-12	10.66
STS-36	1-1/8	1.990	2	2.000	2.050	18-1/4	6-3/4	2-1/4"- 4-1/2	2-1/4"-12	15.63
STS-40	1-1/4	2.240	2-1/4	2.250	2.300	20-1/4	7-1/2	2-1/2"- 4	2-1/2"- 12	21.00
STS-44	1-3/8	2.365	2-3/8	2.375	2.410	22-7/8	8-1/4	2-3/4"- 4	2-3/4"- 12	30.50
STS-48	1-1/2	2.740	2-3/4	2.750	2.810	24-3/4	9	3"- 4	3"- 12	41.10

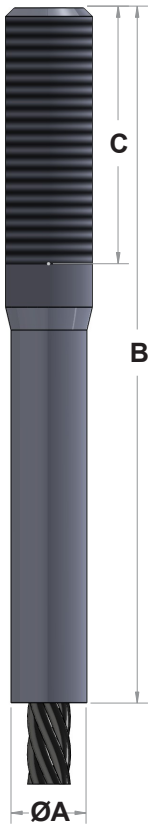

- ✓ Carbon Steel.
- ✓ Specially treated for swaging.
- ✓ Stocked .
- ✓ Also available in Stainless Steel upon request.
- ✓ Nuts available.

CAUTION

STS Threaded Studs are recommended for use with 6 x 19 or 6 x 37 IWRC regular lay ropes. They are also satisfactory on galvanized bridge rope. Before using studs with any other type lay, construction, or grade of wire rope, it is recommended that a test assembly be destructively tested to prove the adequacy of the assembly.

Note: We stock right-handed N.C. thread. Left-handed and fine thread are available upon special request. Sizes for larger diameter rope can be supplied. All studs supplied without wrench grips unless requested.

All dimensions are subject to tolerance.

Stainless Steel Threaded Studs

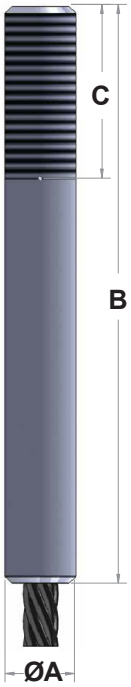

- ✓ Stainless Steel.
- ✓ Specially treated for swaging.
- ✓ Stocked .
- ✓ Stainless Steel Nuts and Hardware available.

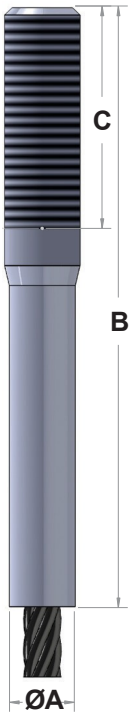

Stock No.	Rope Size	After Swage		C	Thread Description			Weight lbs. Each
		A	B		Size	NC	NF	
TTS-8-SS	1/4	9/16	4-23/32	1-1/2	9/16	12	18	0.281
TTS-8A-SS	1/4	1/2	4-23/32	1-1/2	1/2	13	20	0.213
TTS-10-SS	5/16	5/8	5-23/32	1-3/4	5/8	11	18	0.413
TTS-10A-SS	5/16	5/8	8-31/32	5	5/8	11	18	0.638
TTS-12-SS	3/8	3/4	6-3/4	2	3/4	10	16	0.719
TTS-12A-SS	3/8	3/4	9-3/4	5	3/4	10	16	1.050
TTS-14-SS	7/16	7/8	7-21/32	2-1/4	7/8	9	14	1.125
TTS-16-SS	1/2	1	8-9/16	2-1/2	1	8	12 or 14	1.644
TTS-16A-SS	1/2	1	12-1/16	6	1	8	12 or 14	2.400

Stock No.	Rope Size	After Swage		C	Thread Description			Weight lbs. Each
		A	B		Size	NC	NF	
STS-4-SS	1/8	7/32	2-3/8	1	1/4	20	28	0.025
STS-6-SS	3/16	5/16	3	1-1/8	3/8	16	24	0.069
STS-8-SS	1/4	7/16	4-1/16	1-1/2	1/2	13	20	0.162
STS-8A-SS	1/4	7/16	5-1/16	2-1/2	1/2	13	20	0.200
STS-10-SS	5/16	9/16	5-1/16	1-7/8	5/8	11	18	0.331
STS-12-SS	3/8	5/8	6-1/4	2-1/4	3/4	10	16	0.575
STS-14-SS	7/16	3/4	7-5/16	2-5/8	7/8	9	14	0.900
STS-16-SS	1/2	7/8	8-1/4	3	1	8	12 or 14	1.632
MM56-16-SS	1/2	3/4	6-5/8	2-1/4	7/8	9	14	1.000

CAUTION

Stainless Steel Threaded Studs are recommended for use with 6 x 19 or 6 x 37 Stainless Steel RRL IWRC wire ropes. Before using Stainless Steel Threaded Studs on any other lay, construction, or grade of wire rope, it is recommended that a test assembly be destructively tested to prove the adequacy of the assembly.

MADE IN USA

Heavy Hex & Heavy Hex Jam Nuts

D	Threads Per Inch ØTH	A	Heavy Hex B	Heavy Hex Jam B	C
1.750	5, 8, 12	3.175	1.750	1.000	2.750
2.000	4.5, 6, 8, 12	3.608	2.000	1.125	3.125
2.250	4.5, 6, 8, 12	4.041	2.250	1.250	3.500
2.500	4, 6, 8, 12	4.474	2.500	1.500	3.875
2.750	4, 6, 8	4.907	2.750	1.625	4.250
3.000	4, 6, 8	5.340	3.000	1.750	4.625
3.250	4, 6, 8	5.774	3.250	1.875	5.000
3.500	4, 6, 8	6.207	3.500	2.000	5.375
3.750	4, 6, 8	6.640	3.750	2.125	5.750
4.000	4, 6, 8	7.073	4.000	2.250	6.125
4.250	4, 6, 8	7.406	4.250	2.4375	6.500
4.500	2.75, 4, 6, 8	7.828	4.500	2.563	6.875
4.750	4, 6, 8	8.266	4.750	2.688	7.250
5.000	2.5, 4, 6, 8	8.688	5.000	2.813	7.625
5.250	2.5, 4, 6, 8	9.125	5.250	2.969	8.000
5.500	4, 6, 8	9.547	5.250	3.094	8.375
5.750	4, 6, 8	10.969	5.750	3.219	8.750
6.000	2.25, 4, 6, 8	10.406	6.000	3.434	9.125

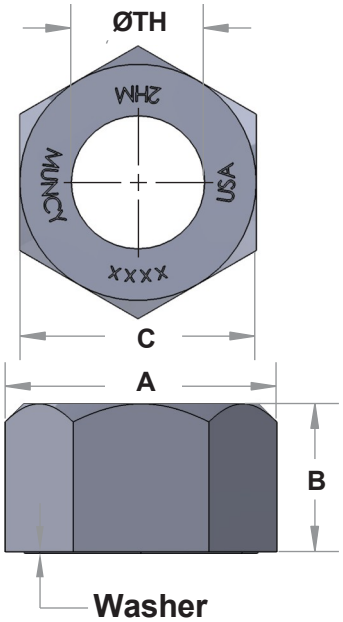

Washer
Heavy Hex Nut

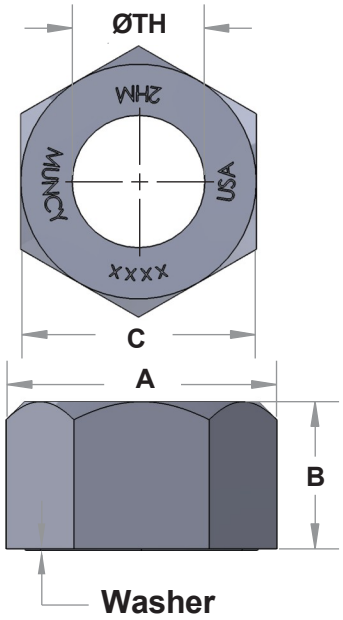

Washer
Heavy Hex Jam Nut

- ✓ Manufactured to: ASTM A194 Grade 2 and 2H, and A563 grades A,B,C AND 2H.
- ✓ Larger and smaller sizes available upon request.
- ✓ Other material specifications available upon request.
- ✓ Hot dip galvanized and zinc plating available upon request.

Note: It is recommended to buy nuts and threaded studs from Muncy Industries to ensure proper fit of nut to stud.

Swage Sockets

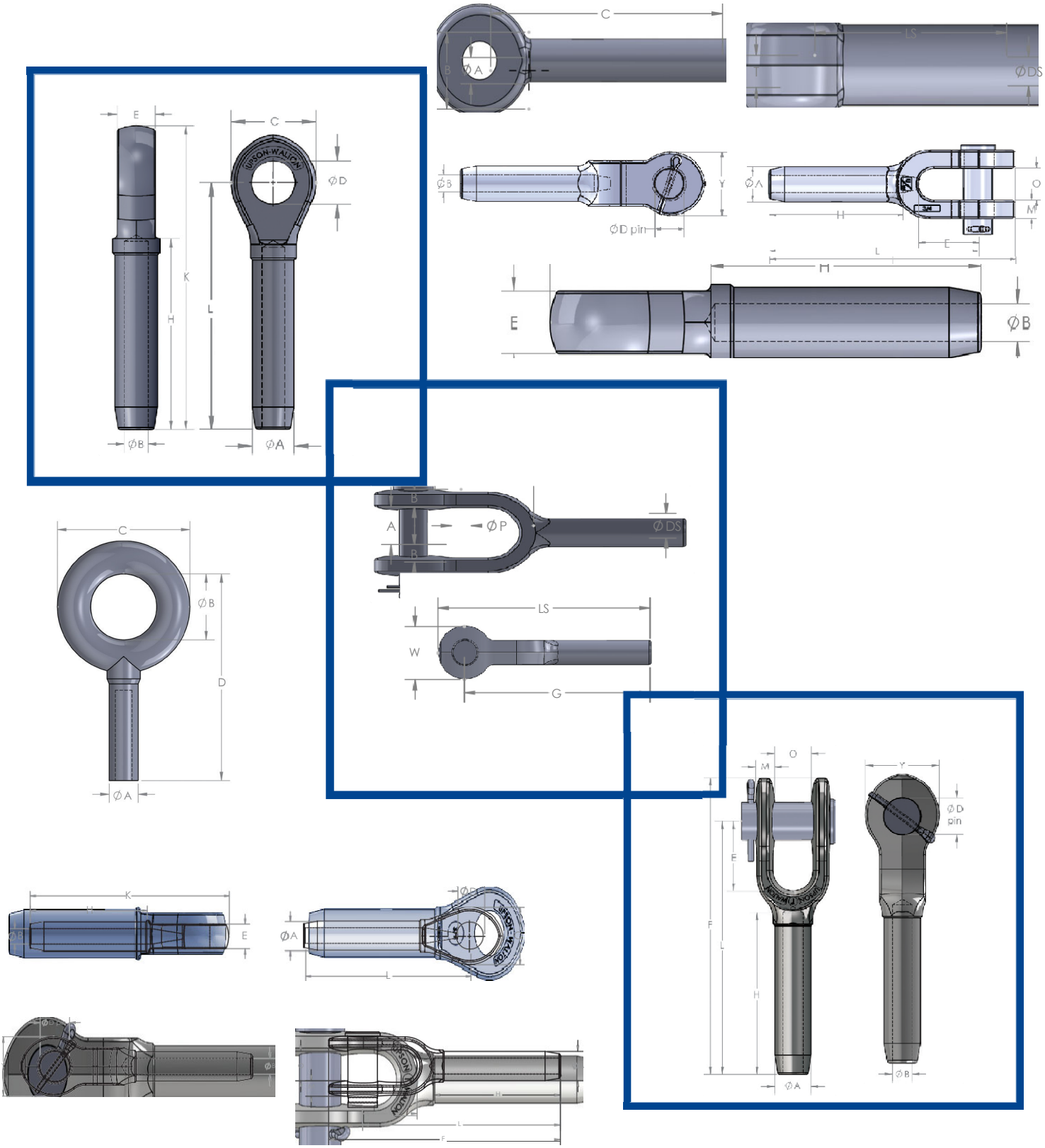

Open Swage Sockets - Carbon Steel

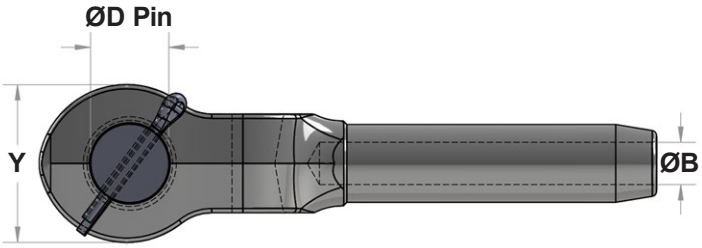

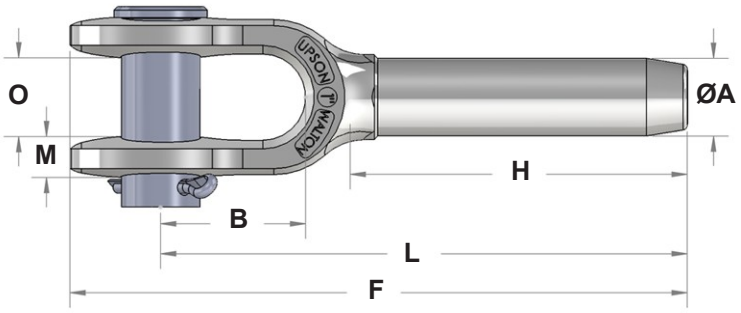

Stock No.	Rope Size	Dimensions										Weight lbs. Each	After Swage Min - Max
		A	B	D	E	F	H	L	M	O	Y		
40025002	1/4	0.495	0.272	0.688	1-1/2	4-3/4	2-1/8	4	5/16	11/16	1-3/8	0.57	0.428 - 0.460
40031302	5/16	0.770	0.339	0.812	1-3/4	6-1/4	3-3/16	5-5/16	13/32	13/16	1-5/8	1.25	0.678 - 0.710
40037502	3/8	0.770	0.406	0.812	1-3/4	6-1/4	3-3/16	5-5/16	13/32	13/16	1-5/8	1.20	0.678 - 0.710
40043802	7/16	0.982	0.484	1.000	2	7-13/16	4-1/4	6-11/16	1/2	1	2	2.45	0.865 - 0.910
40050002	1/2	0.982	0.547	1.000	2	7-13/16	4-1/4	6-11/16	1/2	1	2	2.40	0.865 - 0.910
40056302	9/16	1.257	0.609	1.190	2-1/4	9-9/16	5-5/16	8-1/8	5/8	1-1/4	2-1/2	4.80	1.115 - 1.160
40062502	5/8	1.257	0.672	1.190	2-1/4	9-9/16	5-5/16	8-1/8	5/8	1-1/4	2-1/2	4.50	1.115 - 1.160
40075002	3/4	1.545	0.796	1.380	2-3/4	11-11/16	6-3/8	10	3/4	1-1/2	3	7.80	1.365 - 1.420
40087502	7/8	1.700	0.938	1.630	3-1/4	13-5/8	7-7/16	11-5/8	15/16	1-3/4	3-3/8	11.80	1.490 - 1.550
40100002	1-0/0	1.975	1.062	2.000	3-3/4	15-5/8	8-1/2	13-3/8	1-1/32	2	4	17.80	1.740 - 1.800
40112502	1-1/8	2.245	1.188	2.250	4-1/4	17-1/2	9-9/16	15	1-3/16	2-1/4	4-1/2	28.90	1.990 - 2.050
40125002	1-1/4	2.525	1.328	2.500	4-3/4	19-7/16	10-5/8	16-1/2	1-3/16	2-1/2	5	36.20	2.240 - 2.300
40137502	1-3/8	2.800	1.453	2.500	5-1/4	21-1/4	11-11/16	18-1/8	1-5/16	2-1/2	5-1/4	47.70	2.490 - 2.560
40150002	1-1/2	3.075	1.578	2.750	5-3/4	23-1/4	12-3/4	19-3/4	1-7/16	3	5-3/4	64.40	2.740 - 2.810
40175002	1-3/4	3.385	1.859	3.500	6-3/4	27-1/8	14-7/8	23	1-11/16	3-1/2	7	93.40	2.990 - 3.060
40200002	2-0/0	3.935	2.109	3.750	8	31-7/16	17	26-3/4	1-13/16	4	8	148.00	3.490 - 3.560
40225002	2-1/4	4.450	2.360	4.250	6-3/4	32-7/8	19-1/8	27-3/4	2-9/16	4-1/2	8-3/4	173.00	3.950 - 4.020
40250002	2-1/2	4.930	2.657	4.250	6-3/4	34-5/8	19-5/8	29-1/2	2-9/16	4-1/2	8-3/4	233.00	4.350 - 4.420
40300002	3-0/0	5.960	3.166	5.250	8-5/8	41-1/8	23-3/4	35-5/8	3	5-3/4	9-1/2	382.00	5.240 - 5.310

CAUTION

Carbon Steel Open Swage Sockets are recommended for use on 6 x 19 or 6 x 37 IPS or XIP, (EIP), XXIP (EEIP) IWRC regular lay ropes. Before using Swage Sockets with any other type lay, construction, or grade of wire rope or strand, it is recommended that a test assembly be destructively tested to prove the adequacy of the assembly.

Closed Swage Sockets - Carbon Steel

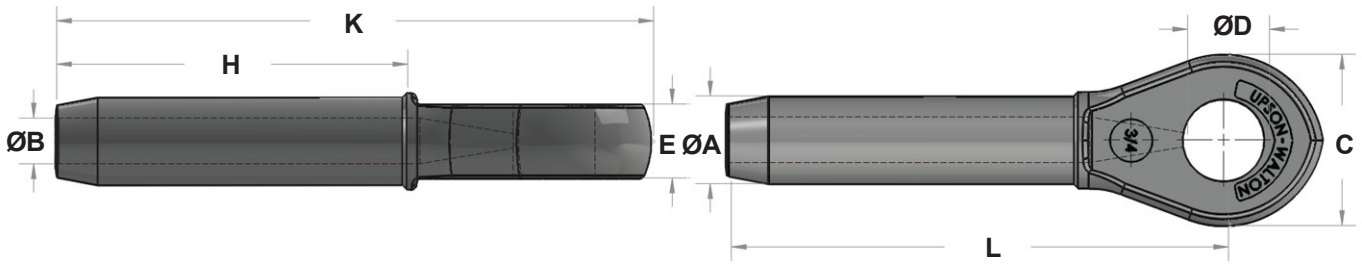

Stock No.	Rope Size	Dimensions								Weight lbs. Each	After Swage Min - Max
		A	B	C	D	E	H	K	L		
41025002	1/4	0.495	0.272	1-7/16	0.750	1/2	2-1/8	4-3/8	3-1/2	0.35	0.428 - 0.460
41031302	5/16	0.770	0.339	1-11/16	0.875	11/16	3-3/16	5-1/2	4-1/2	0.77	0.678 - 0.710
41037502	3/8	0.770	0.406	1-11/16	0.875	11/16	3-3/16	5-1/2	4-1/2	0.73	0.678 - 0.710
41043802	7/16	0.982	0.484	2	1.063	7/8	4-1/4	6-15/16	5-3/4	1.47	0.865 - 0.910
41050002	1/2	0.982	0.547	2	1.063	7/8	4-1/4	6-15/16	5-3/4	1.38	0.865 - 0.910
41056302	9/16	1.257	0.609	2-1/2	1.250	1-1/8	5-5/16	8-3/4	7-1/4	2.90	1.115 - 1.160
41062502	5/8	1.257	0.672	2-1/2	1.250	1-1/8	5-5/16	8-3/4	7-1/4	2.80	1.115 - 1.160
41075002	3/4	1.545	0.796	3	1.438	1-5/16	6-3/8	10-3/8	8-5/8	5.16	1.365 - 1.420
41087502	7/8	1.700	0.938	3-1/2	1.688	1-1/2	7-7/16	12-1/8	10-1/8	7.40	1.490 - 1.550
41100002	1-0/0	1.975	1.062	4	2.063	1-3/4	8-1/2	13-3/4	11-1/2	11.20	1.740 - 1.800
41112502	1-1/8	2.245	1.188	4-1/2	2.313	2	9-9/16	15-1/4	12-3/4	16.00	1.990 - 2.050
41125002	1-1/4	2.525	1.328	5	2.563	2-1/4	10-5/8	17-1/4	14-3/8	22.70	2.240 - 2.300
41137502	1-3/8	2.800	1.453	5-1/4	2.563	2-1/4	11-11/16	18-7/8	15-3/4	29.00	2.490 - 2.560
41150002	1-1/2	3.075	1.578	5-1/2	2.813	2-1/2	12-3/4	20-3/8	17	37.50	2.740 - 2.810
41175002	1-3/4	3.385	1.859	6-3/4	3.563	3	14-7/8	24	20	55.70	2.990 - 3.060
41200002	2-0/0	3.935	2.109	7-3/4	3.813	3-1/4	17	27-1/2	23	90.00	3.490 - 3.560
41225002	2-1/4	4.450	2.360	8-5/8	4.312	4	19-1/8	29-3/4	24-7/8	125.00	3.950 - 4.020
41250002	2-1/2	4.930	2.657	8-5/8	4.312	4	19-5/8	31-1/8	26-1/4	142.00	4.350 - 4.420
41300002	3-0/0	5.960	3.166	9-1/4	5-5/16	5-3/8	23-3/4	37-3/4	32-1/8	252.00	5.240 - 5.310

CAUTION

Carbon Steel Closed Swage Sockets are recommended for use on 6 x 19 or 6 x 37 IPS or XIP, (EIP), XXIP (EEIP) IWRC regular lay ropes. Before using Swage Sockets with any other type lay, construction, or grade of wire rope, or strand, it is recommended that a test assembly be destructively tested to prove the adequacy of the assembly.

Open Swage Sockets - Stainless Steel

- ✓ 304 stainless steel.
- ✓ Dimensions modeled after Carbon Steel Swage Socket.

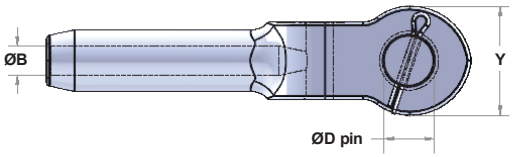

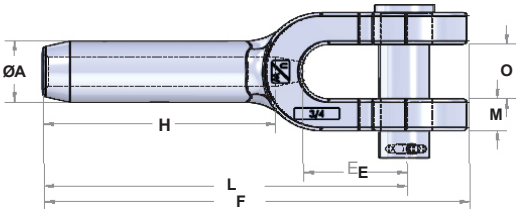

Stock No.	Rope Size	Dimensions										After Swage
		A	B	D	E	F	H	L	M	O	Y	Min - Max
40025050	1/4	0.495	0.272	0.688	1-1/2	4-3/4	2-1/8	4	5/16	11/16	1-3/8	0.428 - 0.460
40031350	5/16	0.770	0.339	0.812	1-3/4	6-1/4	3-3/16	5-5/16	13/32	13/16	1-5/8	0.678 - 0.710
40037550	3/8	0.770	0.406	0.812	1-3/4	6-1/4	3-3/16	5-5/16	13/32	13/16	1-5/8	0.678 - 0.710
40043850	7/16	0.982	0.484	1.000	2	7-13/16	4-1/4	6-11/16	1/2	1	2	0.865 - 0.910
40050050	1/2	0.982	0.547	1.000	2	7-13/16	4-1/4	6-11/16	1/2	1	2	0.865 - 0.910
40056350	9/16	1.257	0.609	1.190	2-1/4	9-9/16	5-5/16	8-1/8	5/8	1-1/4	2-1/2	1.115 - 1.160
40062550	5/8	1.257	0.672	1.190	2-1/4	9-9/16	5-5/16	8-1/8	5/8	1-1/4	2-1/2	1.115 - 1.160
40075050	3/4	1.545	0.796	1.380	2-3/4	11-11/16	6-3/8	10	3/4	1-1/2	3	1.365 - 1.420
40087550	7/8	1.700	0.938	1.630	3-1/4	13-5/8	7-7/16	11-5/8	15/16	1-3/4	3-3/8	1.490 - 1.550
40100050	1-0/0	1.975	1.062	2.000	3-3/4	15-5/8	8-1/2	13-3/8	1-1/32	2	4	1.740 - 1.800
40112550	1-1/8	2.245	1.188	2.250	4-1/4	17-1/2	9-9/16	15	1-3/16	2-1/4	4-1/2	1.990 - 2.050
40125050	1-1/4	2.525	1.328	2.500	4-3/4	19-7/16	10-5/8	16-1/2	1-3/16	2-1/2	5	2.240 - 2.300

CAUTION

Stainless Steel Open Swage Sockets are recommended for use on 6 x 19 or 6 x 37 stainless steel wire rope, SS sockets are also approved for use on IPS or XIP (EIP), XXIP (EEIP), RRL, FC IWRC regular lay ropes. Before using Swage Sockets with any other type of lay, construction, or grade of wire rope or strand, it is recommended that a test assembly be destructively tested to prove the adequacy of the assembly.

Closed Swage Sockets - Stainless Steel

- ✓ 304 stainless steel.
- ✓ Dimensions modeled after Carbon Steel Swage Socket.

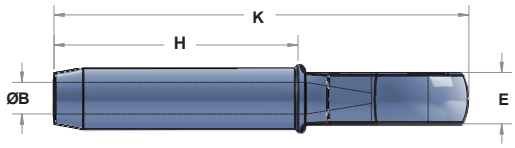

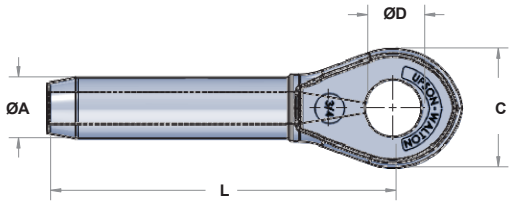

Stock No.	Rope Size	Dimensions								After Swage
		A	B	C	D	E	H	K	L	Min - Max
41025050	1/4	0.495	0.272	1-7/16	0.750	1/2	2-1/8	4-3/8	3-1/2	0.428 - 0.460
41031350	5/16	0.770	0.339	1-11/16	0.875	11/16	3-3/16	5-1/2	4-1/2	0.678 - 0.710
41037550	3/8	0.770	0.406	1-11/16	0.875	11/16	3-3/16	5-1/2	4-1/2	0.678 - 0.710
41043850	7/16	0.982	0.484	2	1.063	7/8	4-1/4	6-15/16	5-3/4	0.865 - 0.910
41050050	1/2	0.982	0.547	2	1.063	7/8	4-1/4	6-15/16	5-3/4	0.865 - 0.910
41056350	9/16	1.257	0.609	2-1/2	1.250	1-1/8	5-5/16	8-3/4	7-1/4	1.115 - 1.160
41062550	5/8	1.257	0.672	2-1/2	1.250	1-1/8	5-5/16	8-3/4	7-1/4	1.115 - 1.160
41075050	3/4	1.545	0.796	3	1.438	1-5/16	6-3/8	10-3/8	8-5/8	1.365 - 1.420
41087550	7/8	1.700	0.938	3-1/2	1.688	1-1/2	7-7/16	12-1/8	10-1/8	1.490 - 1.550
41100050	1-0/0	1.975	1.062	4	2.063	1-3/4	8-1/2	13-3/4	11-1/2	1.740 - 1.800
41112550	1-1/8	2.245	1.188	4-1/2	2.313	2	9-9/16	15-1/4	12-3/4	1.990 - 2.050
41125050	1-1/4	2.525	1.328	5	2.563	2-1/4	10-5/8	17-1/4	14-3/8	2.240 - 2.300

CAUTION

Stainless Steel Closed Swage Sockets are recommended for use on 6 x 19 or 6 x 37 stainless steel wire rope, SS sockets are also approved for use on IPS or XIP (EIP), XXIP (EEIP), RRL, FC IWRC regular lay ropes. Before using Swage Sockets with any other type of lay, construction, or grade of wire rope or strand, it is recommended that a test assembly be destructively tested to prove the adequacy of the assembly.

Boom Pendant Open Swage Sockets

Stock No.	Rope Size	Dimensions										Weight lbs. Each	After Swage Min - Max
		A	B	D	E	F	H	L	M	O	Y		
40100010	1-1/8	1.975	1.188	2.000	3.750	15.625	8.500	13.375	1.031	2.000	4.000	12.69	1.740 - 1.800
40112510	1-1/4	2.245	1.328	2.250	4.250	17.500	9.563	15.000	1.188	2.250	4.500	19.35	1.990 - 2.050
40125010	1-3/8	2.525	1.453	2.500	4.750	19.438	10.625	16.500	1.188	2.500	5.000	26.38	2.240 - 2.300
40137510	1-1/2	2.800	1.578	2.500	5.250	21.250	11.688	18.125	1.313	2.500	5.250	38.00	2.490 - 2.560
40150010	1-3/4	3.075	1.859	2.750	5.750	23.250	12.750	19.750	1.438	3.000	5.500	48.83	2.740 - 2.810

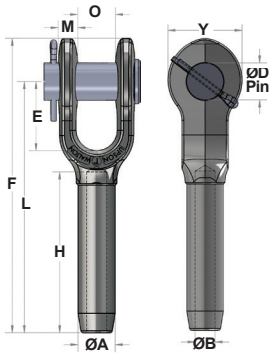

✓ RFID Enabled Upon Request.

CAUTION

Boom Pendant Open Swage Sockets are recommended for use on 6 x 19 or 6 x 37 IPS or XIP, EIP, XXIP, EEIP IWRC regular lay ropes. Before using Swage Sockets with any other type lay, construction, or grade of wire rope or strand, it is recommended that a test assembly be destructively tested to prove the adequacy of the assembly.

Boom Pendant Closed Swage Sockets

Stock No.	Rope Size	Dimensions								Weight lbs. Each	After Swage Min - Max
		A	B	C	D	E	H	K	L		
41100010	1-1/8	1.975	1.188	4.000	2.063	1.750	8.500	13.750	11.500	11.00	1.740 - 1.800
41112510	1-1/4	2.245	1.328	4.500	2.313	2.000	9.563	15.250	12.750	15.21	1.990 - 2.050
41125010	1-3/8	2.525	1.453	5.000	2.563	2.250	10.625	17.250	14.375	22.25	2.240 - 2.300
41137510	1-1/2	2.800	1.578	5.250	2.563	2.250	11.688	18.875	15.750	28.16	2.490 - 2.560
41150010	1-3/4	3.075	1.859	5.500	2.813	2.500	12.750	20.375	17.000	34.65	2.740 - 2.810

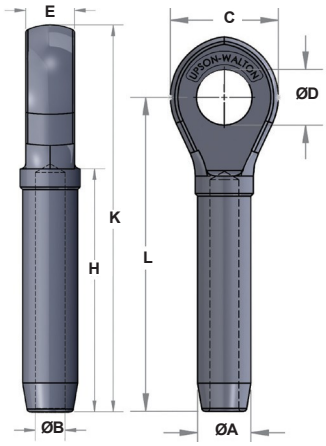

CAUTION

Boom Pendant Closed Sockets are recommended for use on 6 x 19 or 6 x 37 IPS or XIP, EIP, XXIP, EEIP IWRC regular lay ropes. Before using Swage Sockets with any other type lay, construction, or grade of wire rope, it is recommended that the termination be proof loaded to prove the adequacy of the assembly.

Boom Pendant Socket Weights (1 Open, 1 Closed)

Rope Dia. Inches	U-W Boom Pendant Socket	U-W Standard Swage Socket	Typical Spelter Socket	Boom Pendant Thimble
1-1/8	23.69	44.9	35.75	31.6
1-1/4	34.56	58.9	50.75	48.6
1-3/8	48.63	76.7	50.75	48.6
1-1/2	66.16	101.9	76.45	70
1-3/4	83.48	149.1	118	166

✓ **Boom Pendants are Lighter!** Compare Upson-Walton's boom pendant socket to a regular socket, to a typical spelter, and to a boom pendant thimble and you'll see the **WEIGHT SAVINGS!**

✓ Boom Pendants are commonly found in the crane industry.